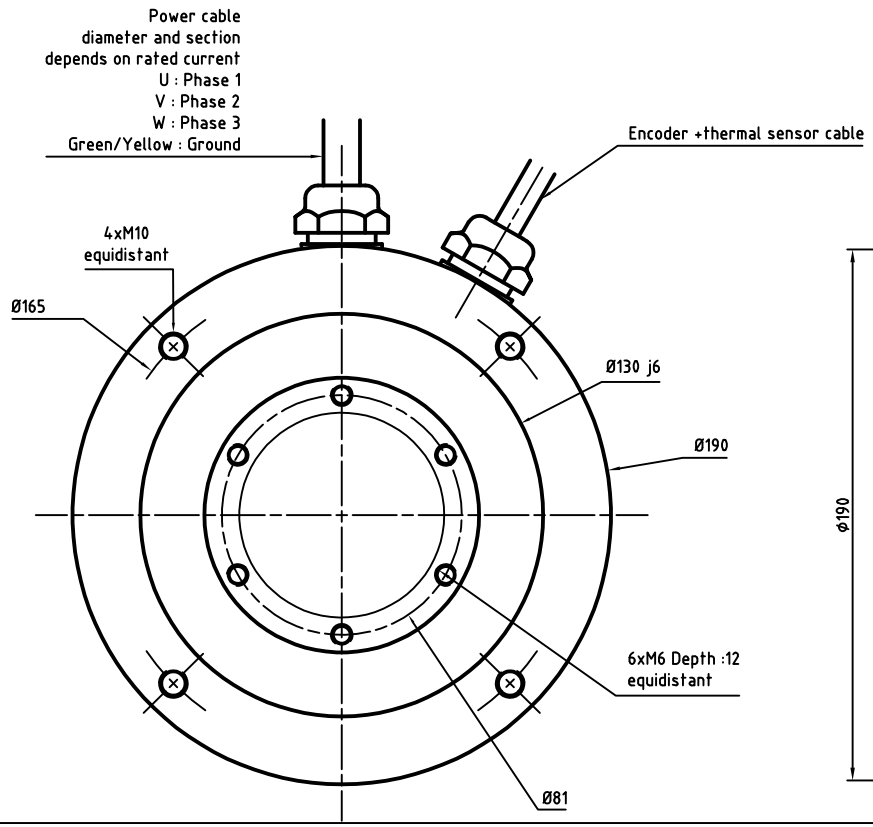

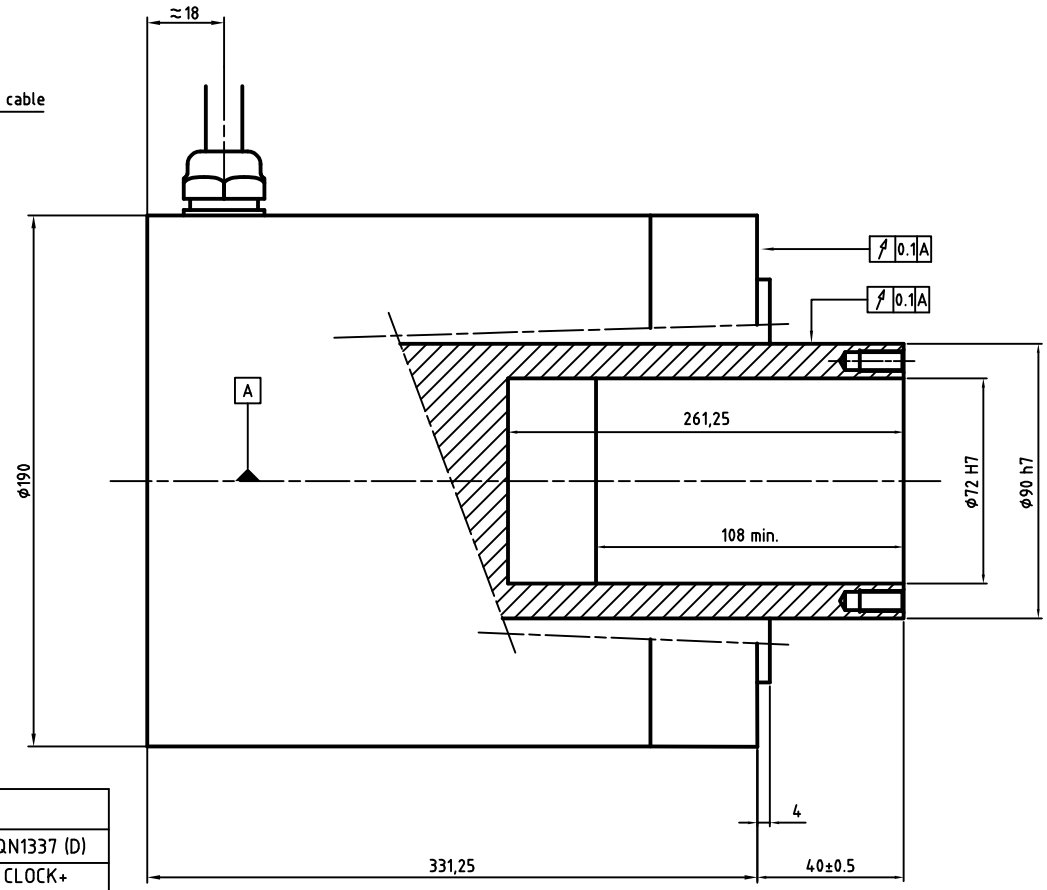

ENCODER SIGNAL COLORS

Cable information		ERN1387 (4)	ERN1381 (5)	ECN1313 (8)	EQN1325 (9)	ECN1325 (C)	EQN1337 (D)
Wires colors	White	A+	0V	Up	Up	CLOCK+	CLOCK+
	Brown	A-	Up	0V	0V	CLOCK-	CLOCK-
	Green	R+	A+	A+	A+	DATA+	DATA+
	Yellow	R-	A-	A-	A-	DATA-	DATA-
	Pink	D+	B-	B-	B-	PTC	PTC
	Grey	D-	B+	B+	B+	PTC	PTC
	Blue	C+	R+	DATA+	DATA+	0V	0V
	Red	C-	R-	DATA-	DATA-	Up	Up
	Black	PTC	PTC	CLOCK+	CLOCK+	KTY84	KTY84
	Violet	PTC	PTC	CLOCK-	CLOCK-	KTY84	KTY84
	Grey/Pink	B+	KTY84	PTC	PTC	N/A	N/A
	Red/Blue	B-	KTY84	PTC	PTC	N/A	N/A
	White/Green	0V	N/A	KTY84	KTY84	N/A	N/A
	Brown/Green	Up	N/A	KTY84	KTY84	N/A	N/A
	White/Yellow	KTY84	N/A	N/A	N/A	N/A	N/A
	Brown/Yellow	KTY84	N/A	N/A	N/A	N/A	N/A

ALXION
AUTOMATIQUE & PRODUCTIQUE
Parc Technologique des Fossés Jean
92712 COLOMBES Cedex
Tél: 0141306304 - Fax: 0141306136

190ST5M13[4-5-8-9-C-D]BXXXX