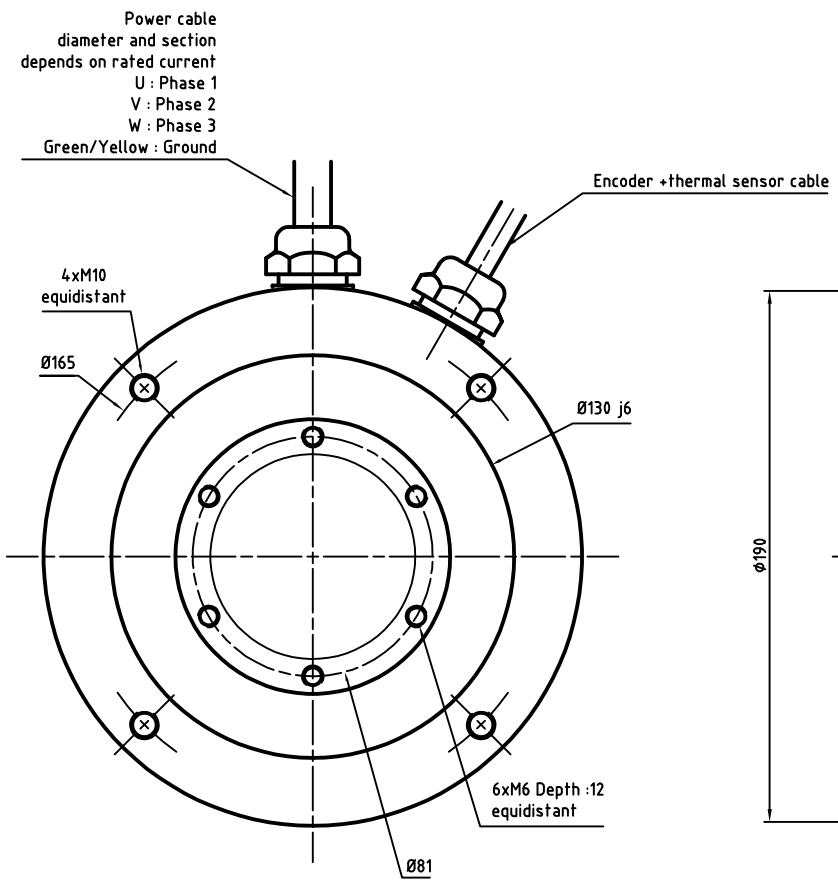

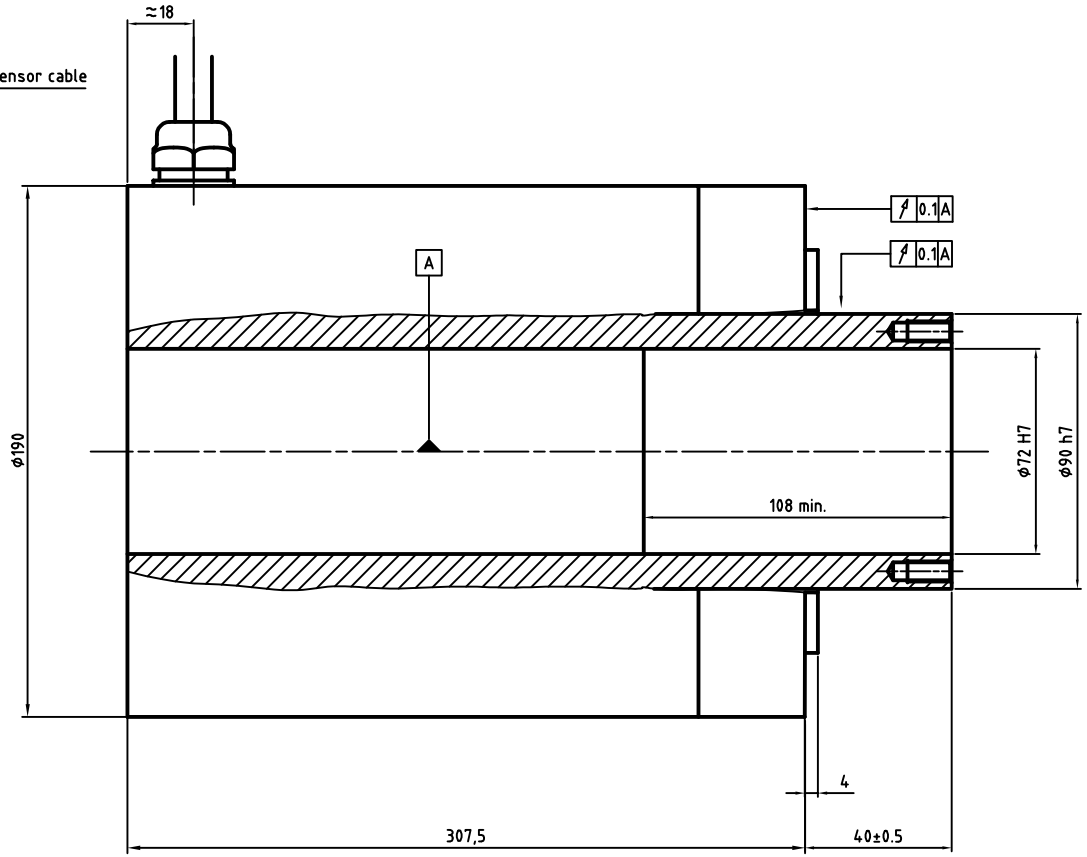

ENCODER SIGNAL COLORS				
Cable information		RESOLVER (1)	ECI 4010 (E)	EBI 4010 (F)
Wires colors	White	Cosinus + (S1)	CLOCK+	CLOCK+
	Brown	Cosinus - (S3)	CLOCK-	CLOCK-
	Green	Sinus + (S2)	Up	Up
	Yellow	Sinus - (S4)	0V	0V
	Pink	PTC	PTC	PTC
	Grey	PTC	PTC	PTC
	Blue	0V (R3)	DATA +	DATA +
	Red	V ref (R1)	DATA-	DATA-
	Black	KTY84	KTY84	KTY84
	Violet	KTY84	KTY84	KTY84

ALXION
AUTOMATIQUE & PRODUCTIQUE
Parc Technologique des Fossés Jean
92712 COLOMBES Cedex
Tél: 0141306304 - Fax: 0141306136

190ST4M11[1-E-F]BXXXX