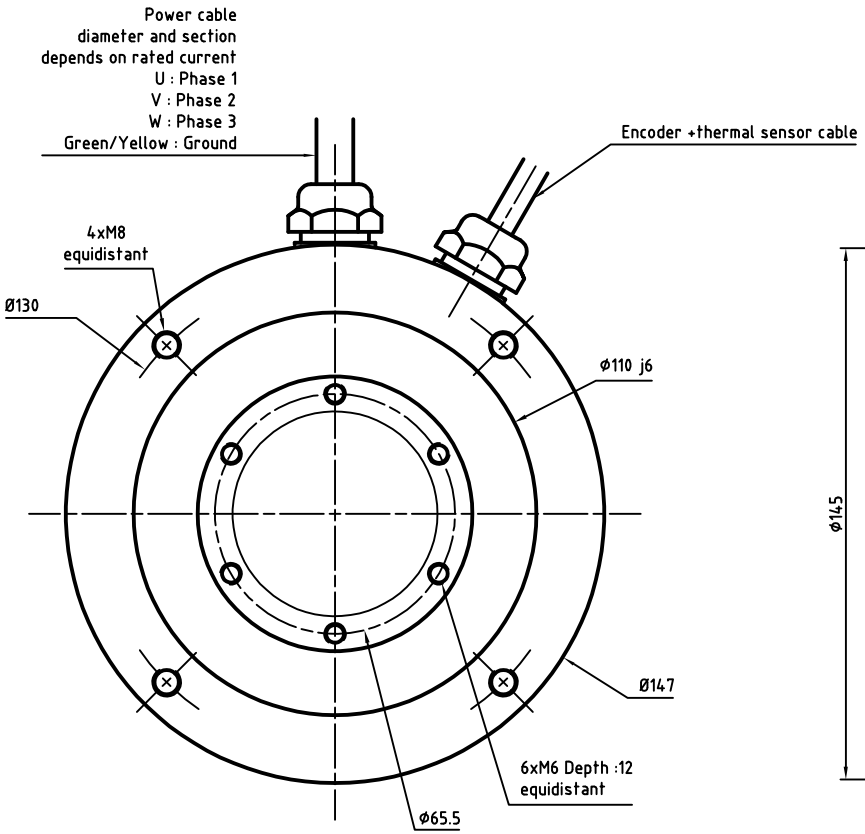

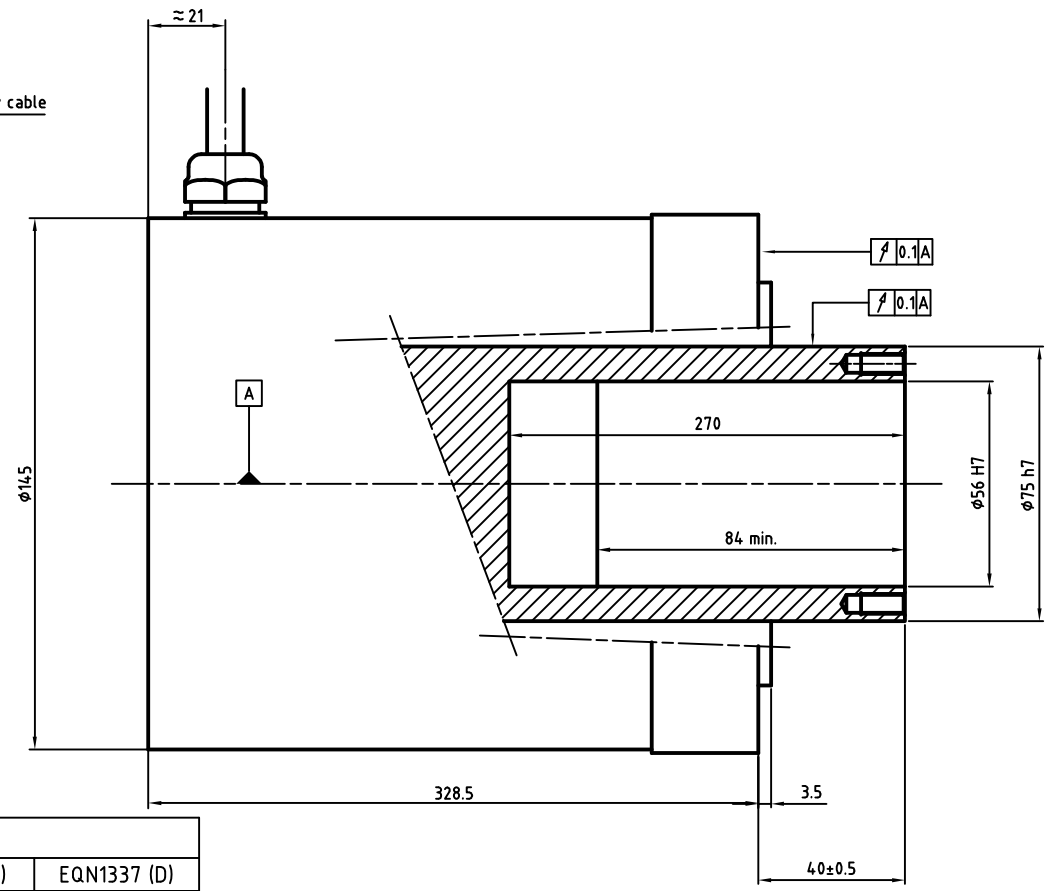

ENCODER SIGNAL COLORS						
Wires colors	ERN1387 (4)	ERN1381 (5)	ECN1313 (8)	EQN1325 (9)	ECN1325 (C)	EQN1337 (D)
White	A+	0V	Up	Up	N/A	N/A
Brown	A-	Up	0V	0V	N/A	N/A
Green	R+	A+	A+	A+	Up	Up
Yellow	R-	A-	A-	A-	0V	0V
Pink	D+	B-	B-	B-	Clock-	Clock-
Grey	D-	B+	B+	B+	Clock+	Clock+
Blue	C+	R+	DATA+	DATA+	DATA+	DATA+
Red	C-	R-	DATA-	DATA-	DATA-	DATA-
Black	CTP	CTP	CLOCK+	CLOCK+	CTP	CTP
Violet	CTP	CTP	CLOCK-	CLOCK-	CTP	CTP
Grey/Pink	B+	KTY84	CTP	CTP	KTY84	KTY84
Red/Blue	B-	KTY84	CTP	CTP	KTY84	KTY84
White/Green	0V	N/A	KTY84	KTY84	N/A	N/A
Brown/Green	Up	N/A	KTY84	KTY84	N/A	N/A
White/Yellow	KTY84	N/A	N/A	N/A	N/A	N/A
Brown/Yellow	KTY84	N/A	N/A	N/A	N/A	N/A

ALXION
AUTOMATIQUE & PRODUCTIQUE
Parc Technologique des Fossés Jean
92712 COLOMBES Cedex
Tél: 0141306304 - Fax: 0141306136

145ST7M13[4-5-8-9-C-D]BXXXX