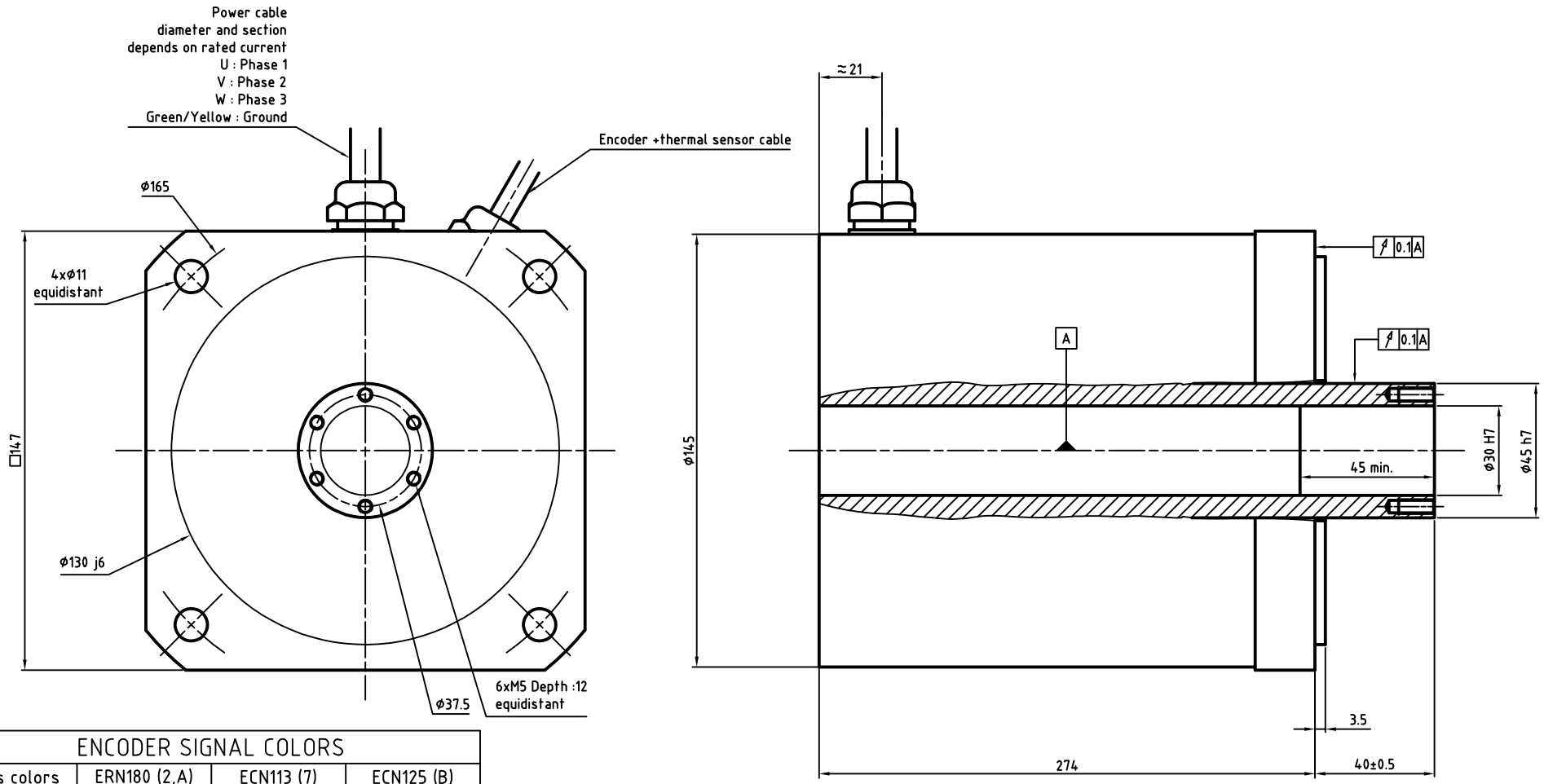

ENCODER SIGNAL COLORS			
Wires colors	ERN180 (2,A)	ECN113 (7)	ECN125 (B)
White	0V	Up	N/A
Brown	Up	0V	N/A
Green	A+	A+	Up
Yellow	A-	A-	0V
Pink	B-	B-	CLOCK-
Grey	B+	B+	CLOCK+
Blue	R+	DATA+	DATA+
Red	R-	DATA-	DATA-
Black	CTP	CLOCK+	CTP
Violet	CTP	CLOCK-	CTP
Grey/Pink	KTY84	CTP	KTY 84
Red/Blue	KTY84	CTP	KTY 84
White/Green	N/A	KTY84	N/A
Brown/Green	N/A	KTY84	N/A

ALXION
AUTOMATIQUE & PRODUCTIQUE
Parc Technologique des Fossés Jean
92712 COLOMBES Cedex
Tél: 0141306304 - Fax: 0141306136

145ST5M22[2-7-A-B]BXXXX